	Finitura	BayKer	Hansgrohe

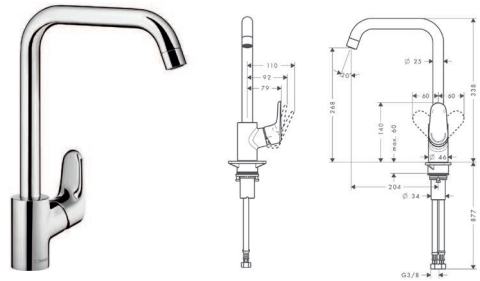

Ecos L Kitchen Mixer chrome 14856 14816000

- swivel range 360°
- handle can be positioned on the right or left
- normal spray
- connection dimension: DN15
- flow rate 11 l/min
- ceramic cartridge with Eco handle position for a reduced flowrate by up to 50%
- connection type: G ⅜ connections
- suitable for continuous flow water heaters

Quick Clean | Eco Smart | Air Power

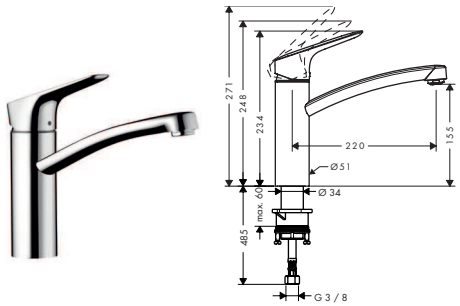

MyCube M kitchen mixer chrome 14854 13815000

- ComfortZone 220
- swivel range 360°
- normal spray
- connection dimension: DN15
- flow rate 12 l/min
- ceramic cartridge
- connection type: G ⅜ connections
- suitable for continuous flow water heaters

Comfort Zone | Eco Smart | Air Power

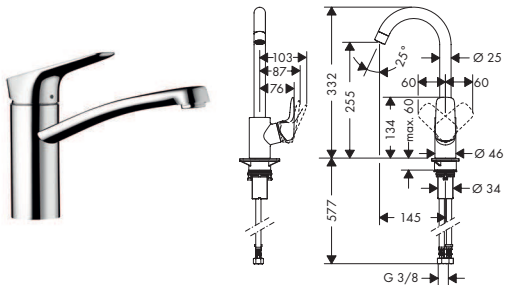

MyCube L kitchen mixer chrome 14855 13816000

- ComfortZone 260
- swivel range adjustable in 3 steps 110°, 150° or 360°
- handle can be positioned on the right or left
- normal spray
- connection dimension: DN15
- flow rate 12 l/min
- ceramic cartridge with Eco handle position for a reduced flowrate by up to 50%
- connection type: G ⅜ connections
- suitable for continuous flow water heaters

Comfort Zone | Eco Smart | Air Power

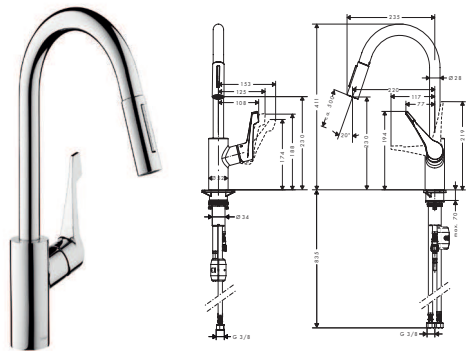

Cento XL Kitchen Mixer chrome 14857 14803000

- swivel range 150°
- normal and spray jet
- lockable shower spray, spray returns through pressing spray diverter
- connection dimension: DN15
- flow rate 10 l/min
- ceramic cartridge with Eco handle position for a reduced flowrate by up to 50%
- connection type: G ⅜ connections
- suitable for continuous flow water heaters

Quick Clean | Eco Smart | Air Power

Measurements at scale drawings are in mm.

Technical specifications and units of measurements are subject to change.